NOTE: - FIGURED DIMENSIONS TO BE TAKEN IN PREFERENCE TO SCALED DIMENSIONS.
- CHECK ALL DIMENSIONS ON SITE PRIOR TO FABRICATION.
- THESE DRAWINGS TO BE READ IN CONJUNCTION WITH SPECIFICATIONS SCHEDULE, IF ANY AND OTHER CONSULTANTS REPORTS, IF ANY.

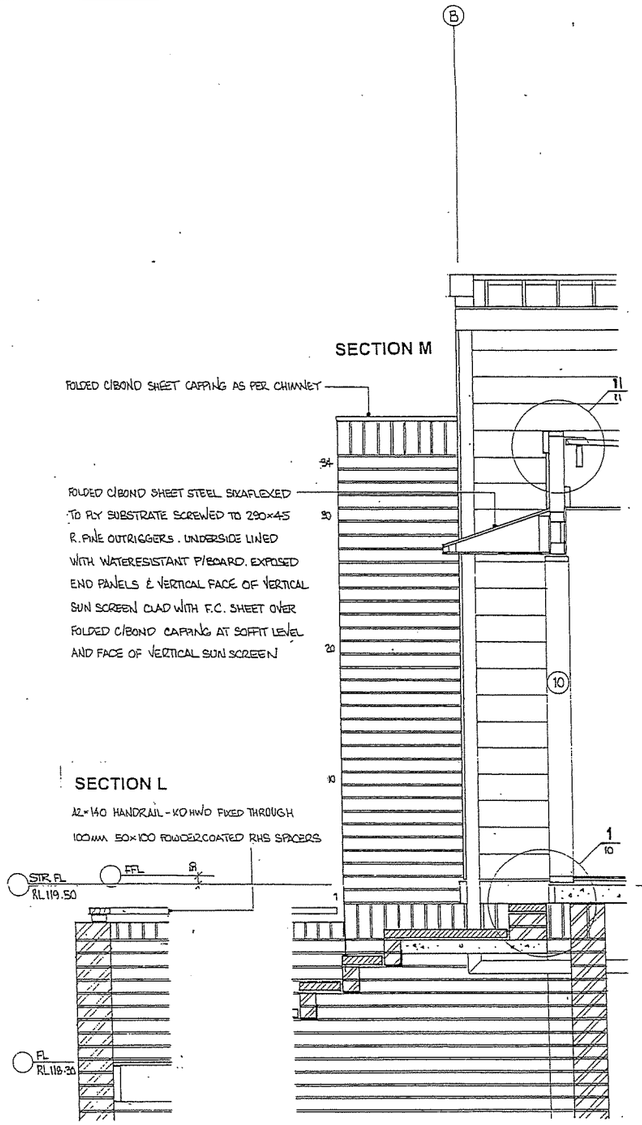


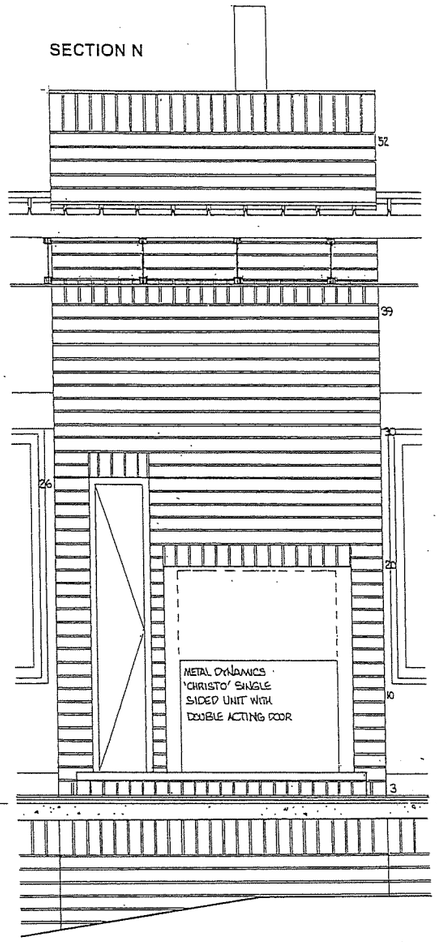


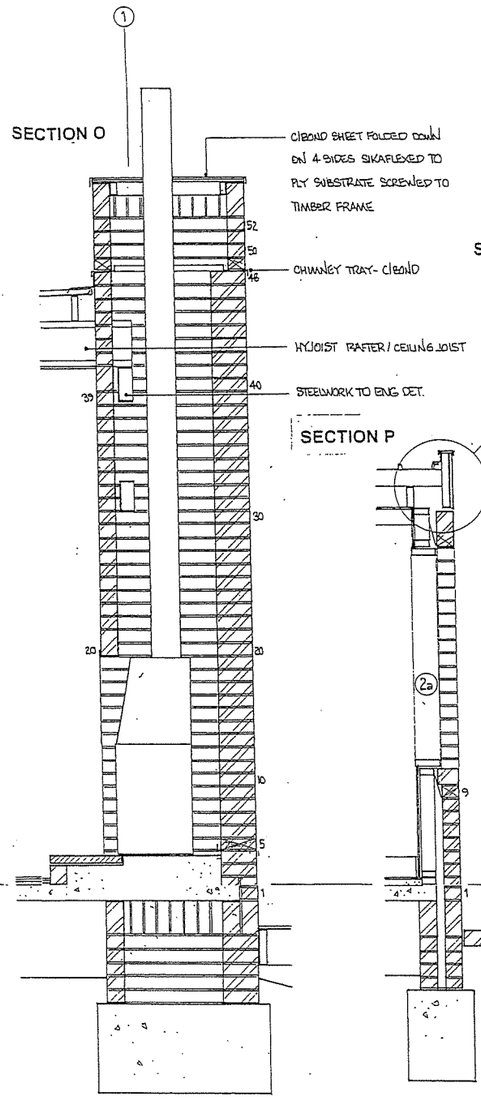


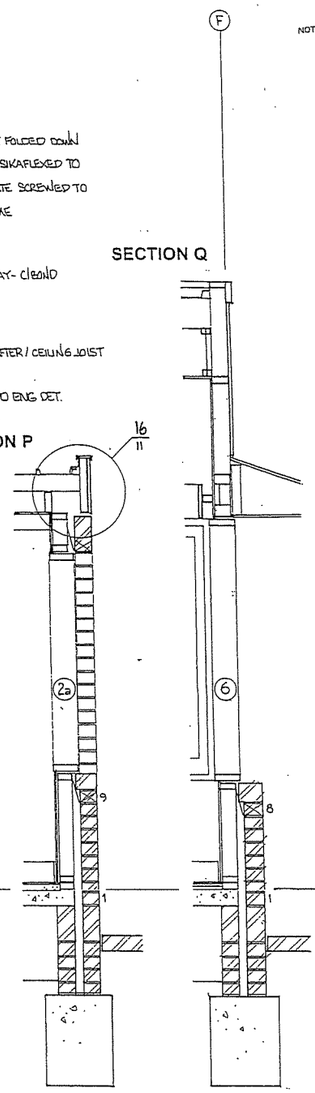


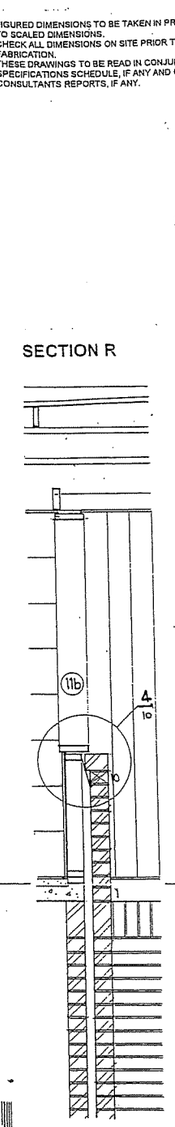


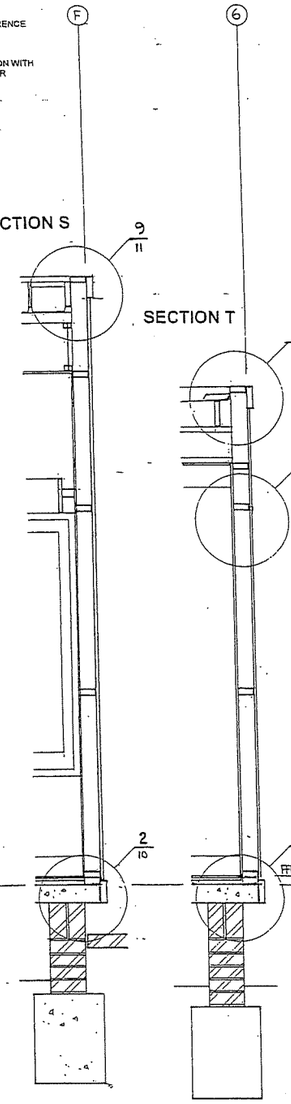


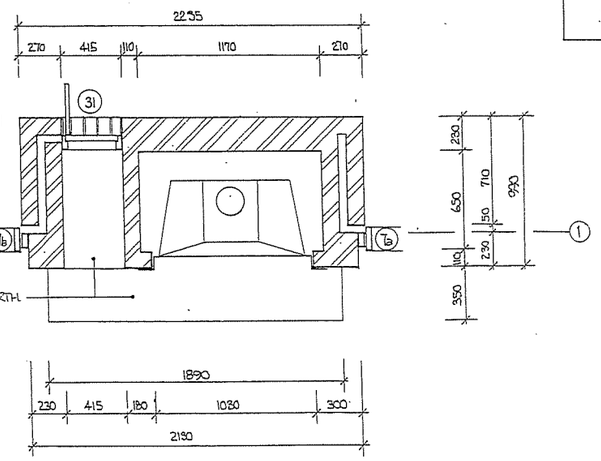


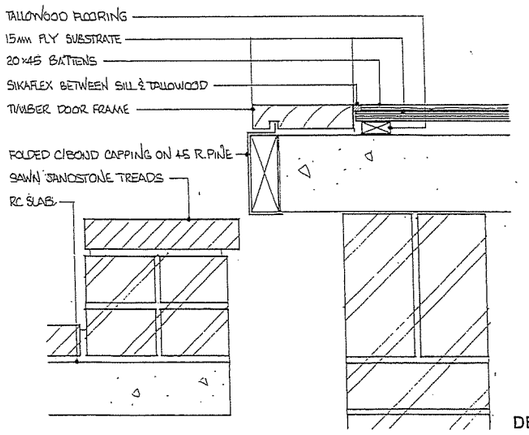


DETAIL 1

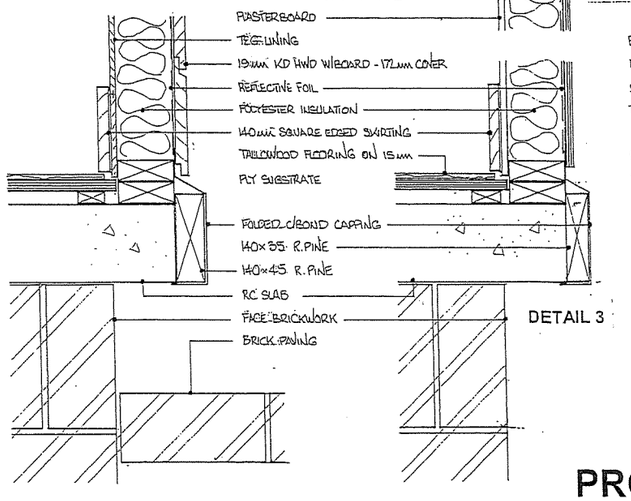


DETAIL 2

DETAIL 3

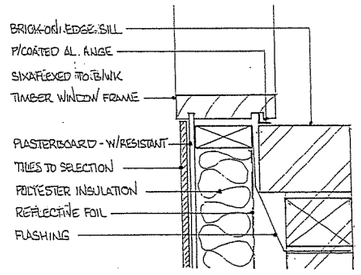


DETAIL 4

DETAIL 5

BRICKWORK AND CLADDING DETAILS

DRWG: WD10
DATE: 03.04.14
SCALE: 1:20, 1:5 @ A1
1:40, 1:10 @ A3

# PROPOSED DWELLING & SHED

LOT 4 DP 25948
APRIL 201

PO BOX 6037 KANGAROO VALLEY 257
TEL (02) 4465 1224 MOB 0412 671 73